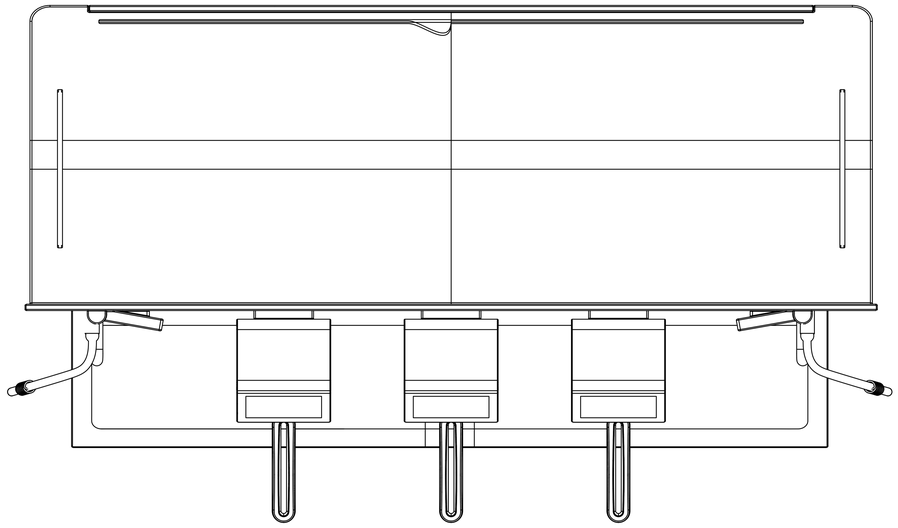

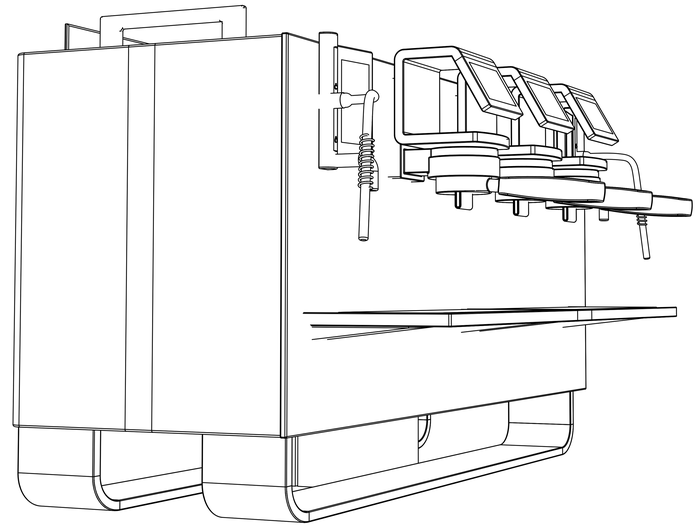

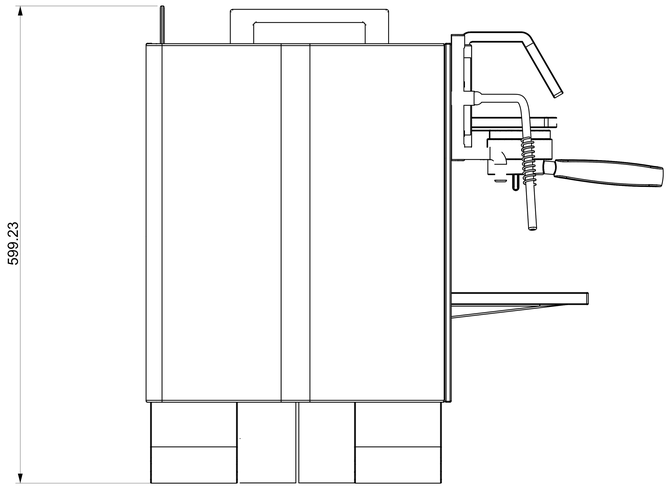
599.23

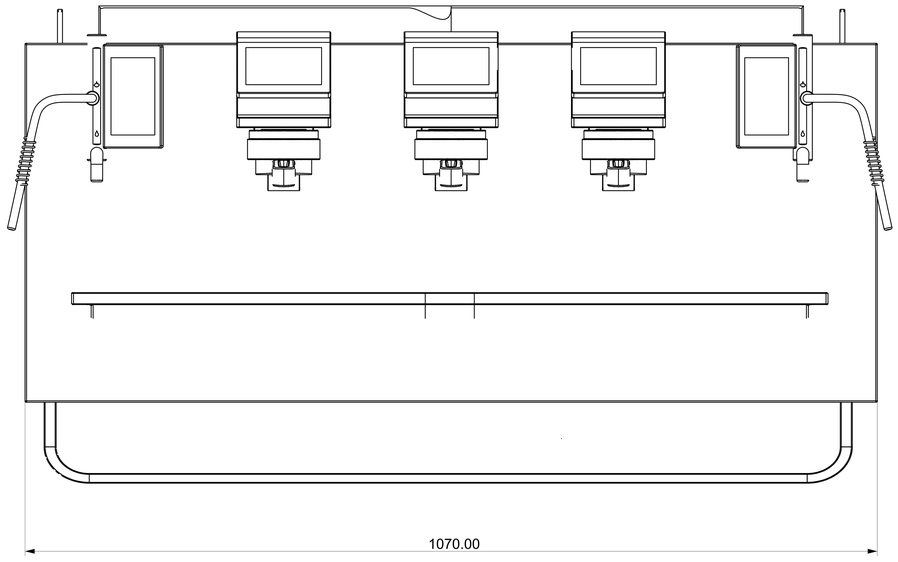
1070.00

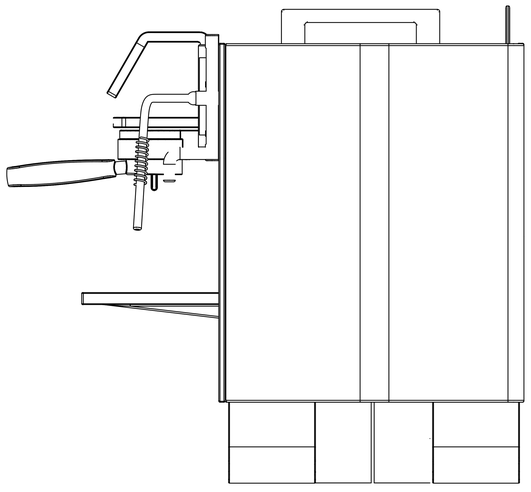

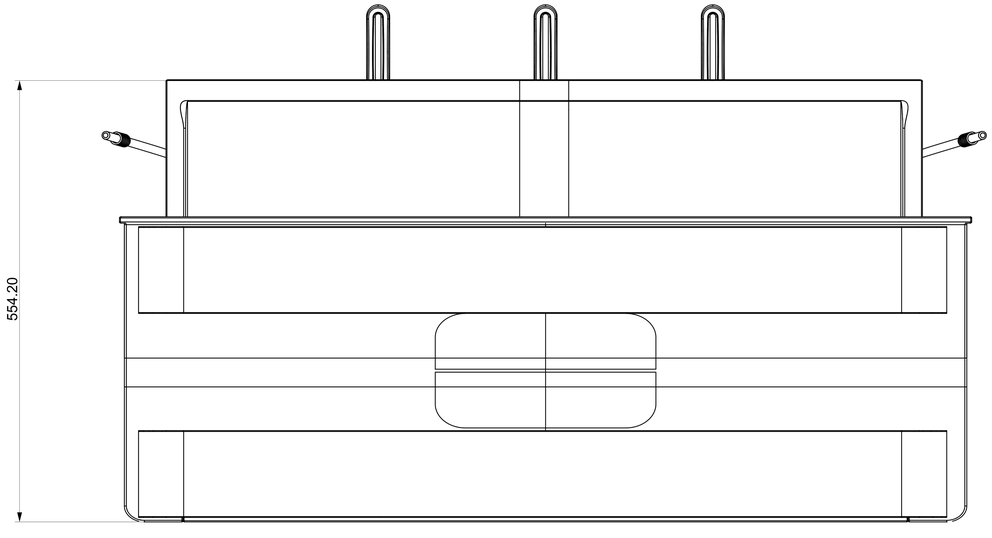
554.20